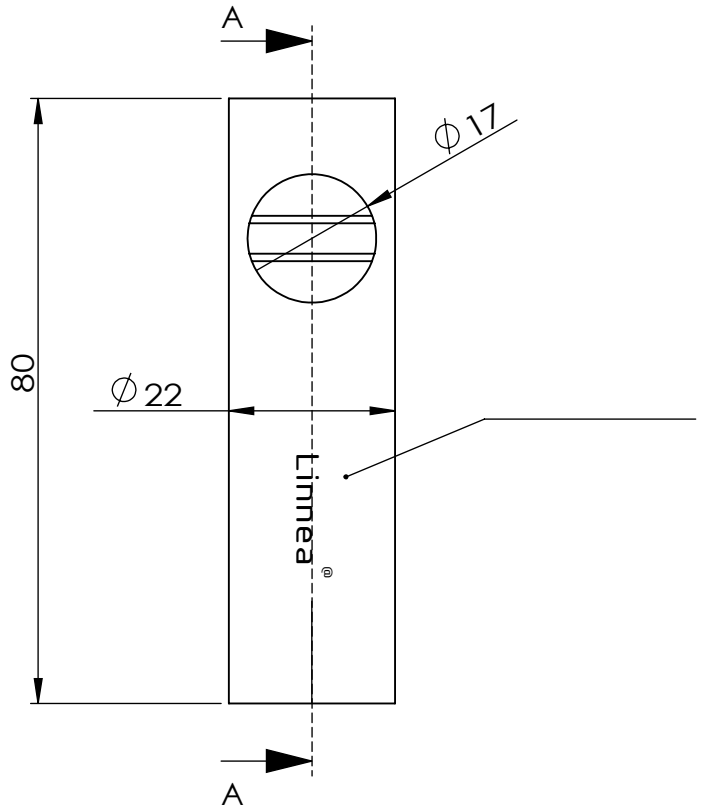

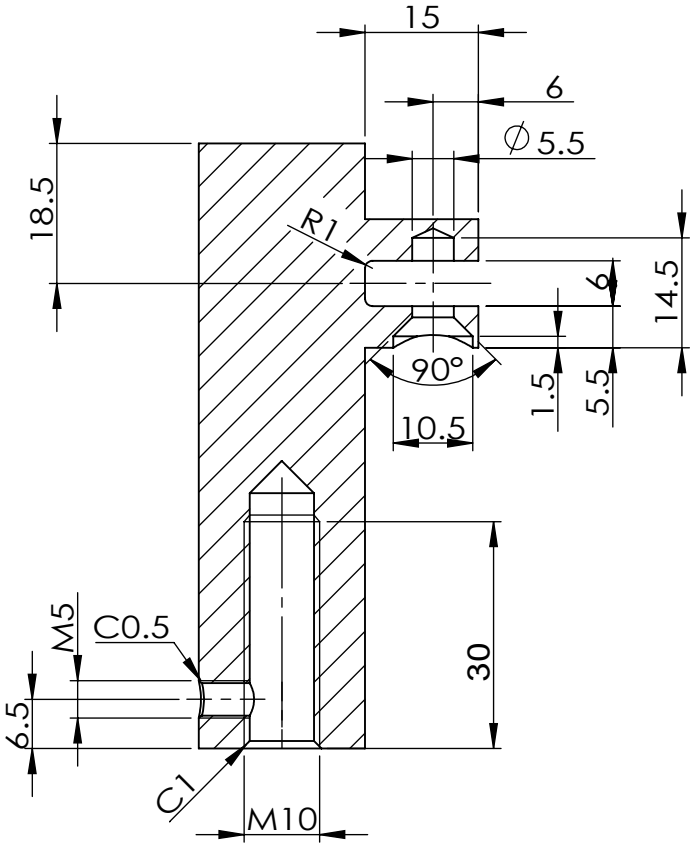

HRB-16BDY-PSS
HRB-16BDY-SSS

linnea®