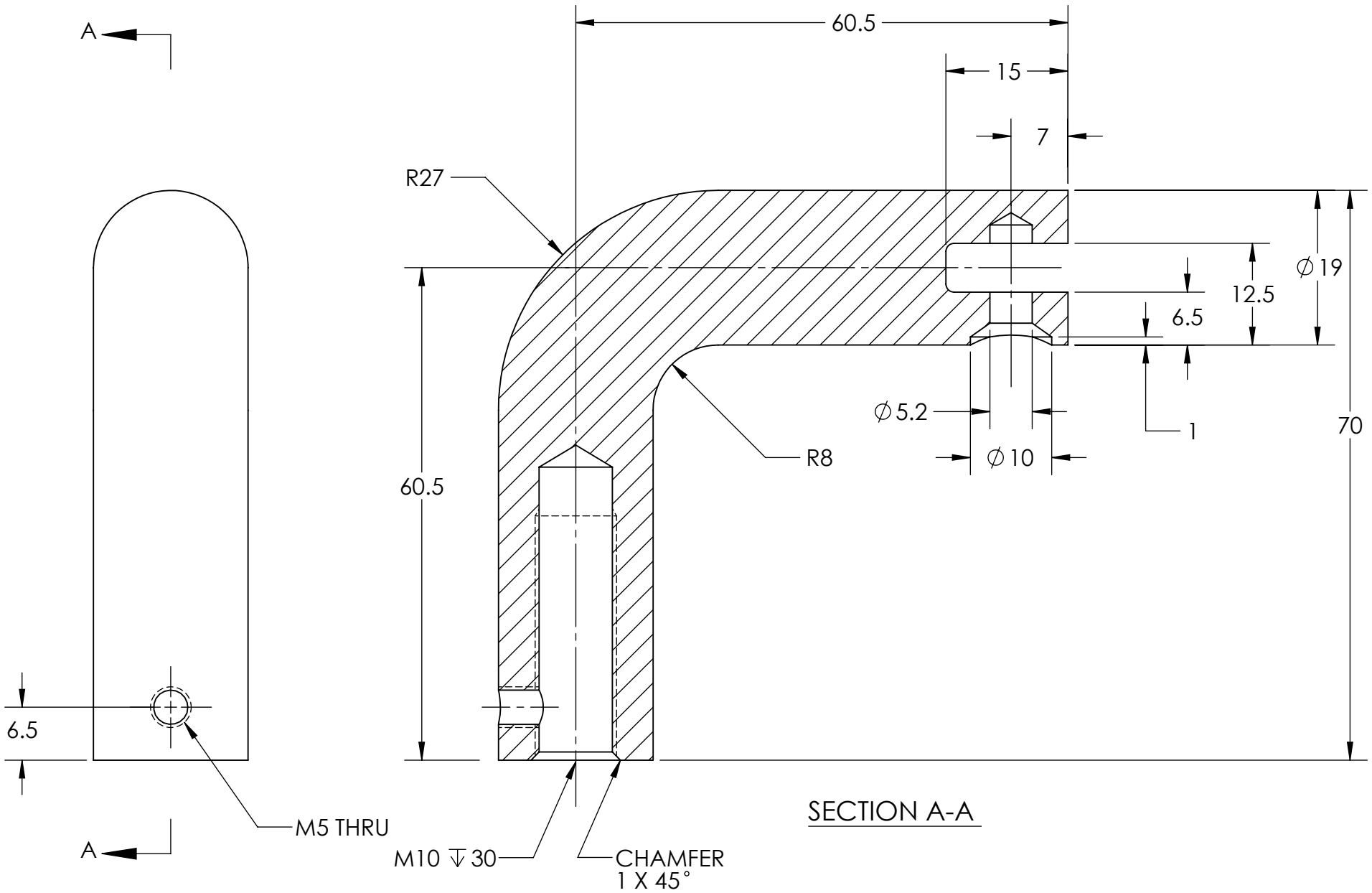

HRB-10BDY

Linnea®

800.219.2366 www.linnea-home.com